Current part is item (9) on diagram. Available at www.oshkoshequipment.com


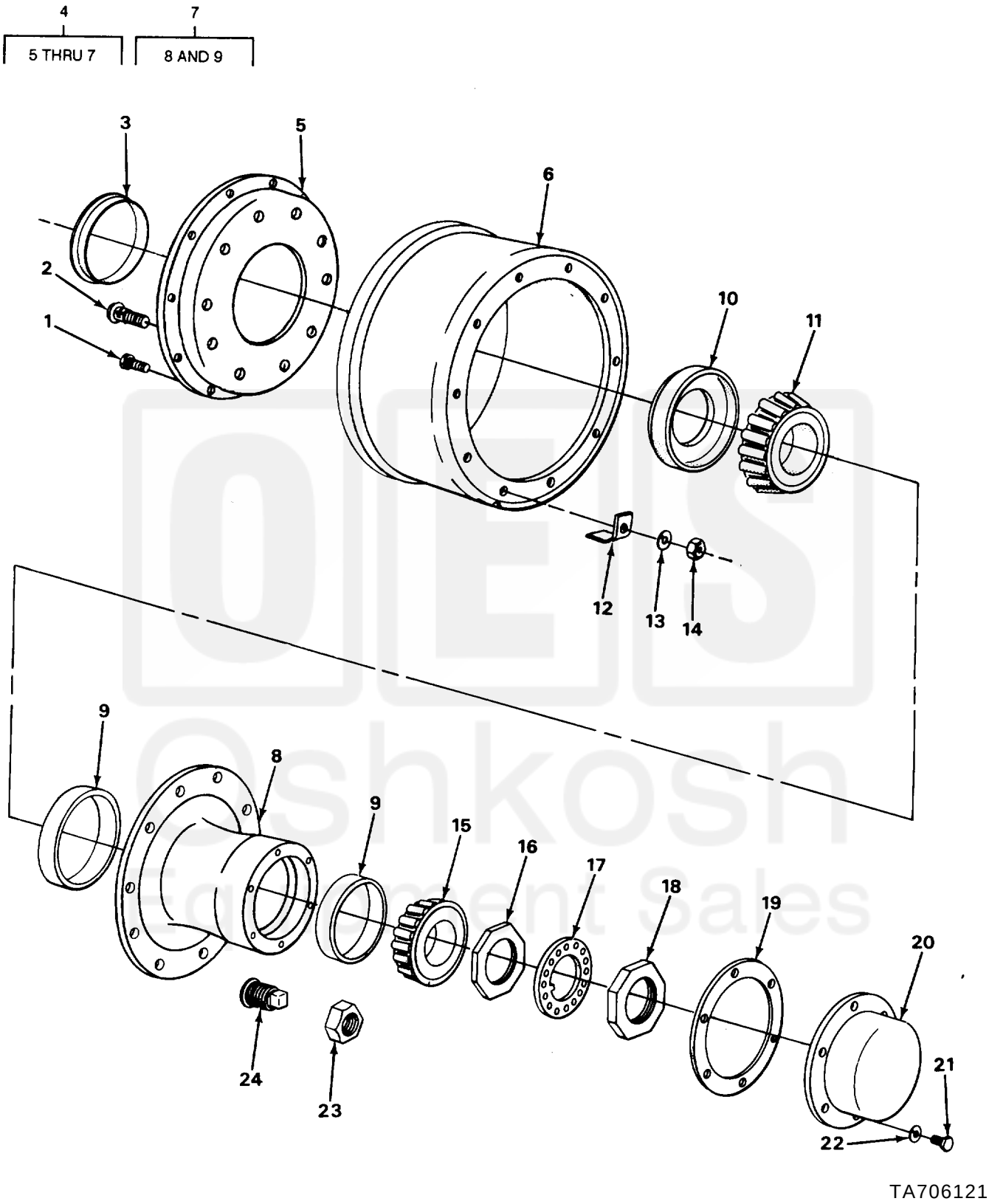


FIGURE 39. HUB AND BRAKEDRUM ASSEMBLY (ALL EXCEPT M127).

Current part is item (9) on diagram. Available at www.oshkoshequipment.com

Current part is item (9) on diagram. Available at www.oshkoshequipment.com



| (1) ITEM NO | (2) SMR CODE | (3) CAGEC | (4) PART NUMBER | (5) DESCRIPTION AND USABLE ON CODES (UOC) | (6) QTY |
|---|---|---|---|---|---|
| | | | | GROUP 1311 WHEEL ASSEMBLY | |
| | | | | FIG. 39 HUB AND BRAKEDRUM ASSEMBLY (ALL EXCEPT M127) | |
| 1 | PAOZZ | 19207 | 7979179 | BOLT,RIBBED SHOULDE<br>UOC:131,133,671,673,674,680,681,682,684 | 20 |
| 2 | PAOZZ | 96906 | MS51946-1 | BOLT,RIBBED SHOULDE LH<br>UOC:131,133,671,673,674,680,681,682,684 | 10 |
| 2 | PAOZZ | 96906 | MS51946-2 | BOLT,RIBBED SHOULDE RH<br>UOC:131,133,671,673,674,680,681,682,684 | 10 |
| 3 | PAOZZ | 19207 | 7409553 | RING,WIPER<br>UOC:131,133,671,673,674,680,681,682,684 | 2 |
| 4 | AOOOO | 19207 | 8710721 | HUB,WHEEL,VEHICULAR LEFT HAND<br>UOC:131,133,671,673,674,680,681,682,684 | 1 |
| 4 | XBOZZ | 19207 | 8710722 | HUB AND DRUM RIGHT HAND<br>UOC:131,133,671,673,674,680,681,682,684 | 1 |
| 5 | PAOZZ | 19207 | 8710724 | .ADAPTER,BRAKE DRUM LEFT AND RIGHT<br>UOC:131,133,671,673,674,680,681,682,684 | 1 |
| 6 | PAOZZ | 19207 | 7409394 | .BRAKE DRUM<br>VOC:131,133,671,673,674,680,681,682,684 | 1 |
| 7 | XB0ZZ | 09389 | 71936E | HUB ASSEMBLY<br>UOC:131,133,671,673,674,680,681,682,684 | 4 |
| 8 | XB0ZZ | 19207 | 8710723 | .HUB,TRAILER WHEEL<br>UOC:131,133,671,673,674,680,681,682,684 | 1 |
| 9 | PAOZZ | 21450 | 706691 | .CUP,TAPERED ROLLER<br>UOC:131,133,671,673,674,680,681,682,684 | 1 |
| 10 | PAOZZ | 19207 | 7979349 | SEAL,PLAIN ENCASED<br>UOC:131,133,671,673,674,680,681,682,684 | 2 |
| 11 | PAOZZ | 96906 | MS19081-137 | BEARING,ROLLER,TAPE INNER<br>UOC:131,133,671,673,674,680,684 | 2 |
| 12 | PAOZZ | 19207 | 7979315 | COVER,ACCESS<br>UOC:131,133,671,673,674,680,681,682,684 | 1 |
| 13 | PAOZZ | 96906 | MS35338-47 | WASHER,LOCK<br>UOC:131,133,671,673,674,680,681,682,684 | 20 |
| 14 | PAOZZ | 96906 | MS51968-11 | NUT,PLAIN,HEXAGON<br>UOC:131,133,671,673,674,680,681,682,684 | 20 |



Current part is item (9) on diagram. Available at www.oshkoshequipment.com